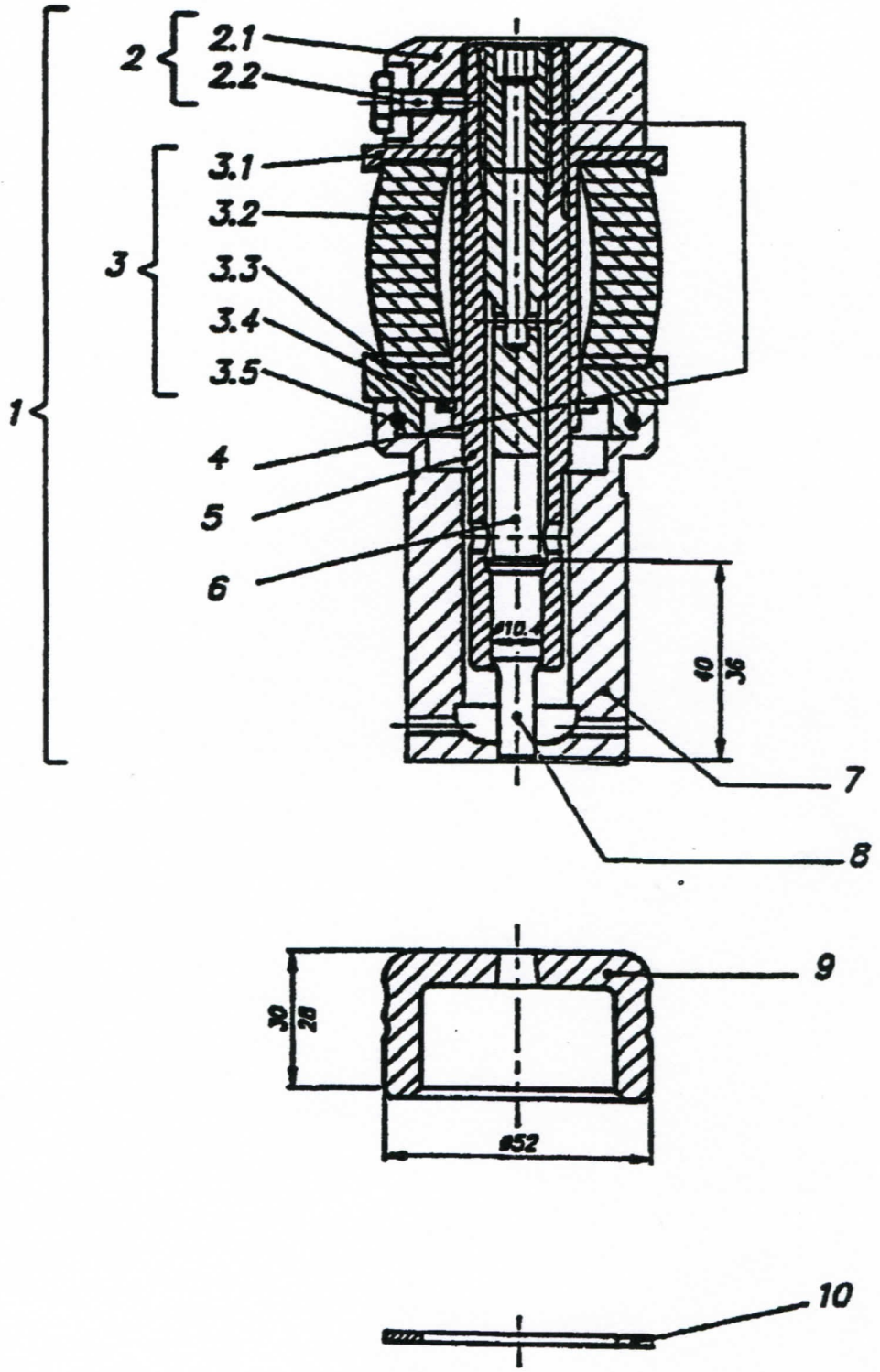

10 OPC

Pos.	Désignation	N° Article	Nbre	Poids
1	ENS. POINCON 10 OPC ROND	**006.404.900**	1	1.500
2	ENS. TETE 35 OPC	**896.050.9**	1	0.310
2.1	TETE OUTIL COMPACT	**896.043.9**	1	0.300
2.2	VIS	**803.522.1**	1	0.010
3	ENS. DEVETISSAGE OUTIL COMPACT	**008.174.0**	1	0.340
3.1	ASSIETTE SUP.	**300.152.0**	1	0.135
3.2	RESSORT COMPACT	**206.046.0**	1	0.110
3.3	ASSIETTE INF.	**340.040.0**	1	0.110
3.4	CIRCLIPS 22/35 OPC	**857.023.1**	1	0.010
3.5	JOINT O-RING DE PRECISION	**518.170.0**	1	0.010
4	VIS TETE OPC	**894.510.9**	1	0.020
5	PORTE-POINCON 10 OPC	**326.201.0**	1	0.250
6	GOUPILLE DISTANCE 10 OPC	**895.058.9**	1	0.040
7	FOURREAU 22 OPC ROND	**102.404.900**	1	0.580
8	POINCON 10 OPC ROND	**105.404.900**	1	0.020
8.a	POINCON 10 OPC ROND < 3 mm	**105.404.910**	1	0.020
9	MATRICE RONDE < 10 mm	**100.348.900**	1	0.340
10	RONDELLE D'AFFUTAGE MATRICE 35	**893.060.9**	1	0.010