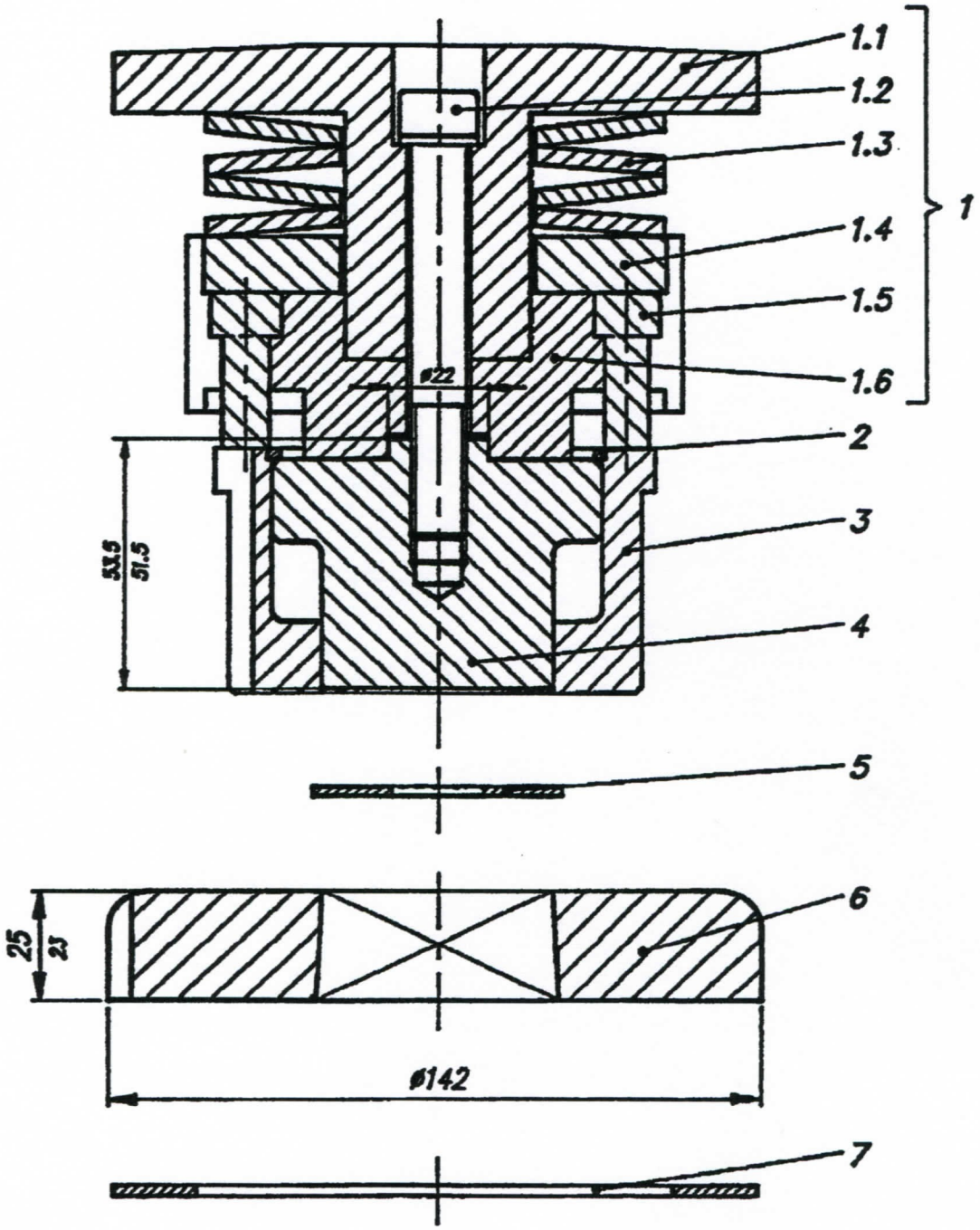


**100 OEM**

| Pos. | Désignation | N° Article | Nbre | Poids |
|---|---|---|---|---|
| 1 | MECANISME ENCOCH. OUTIL 100 OEM | **008.138.0** | 1 | 5.000 |
| | | | | |
| | | | | |
| 1.1 | FRAPPOIR | **300.061.0** | 1 | 3.500 |
| 1.2 | VIS TETE CYLINDRIQUE | **801.103.1** | 1 | 0.010 |
| 1.3 | RONDELLE SURETE EP. REDUIT | **893.001.9** | 4 | 0.200 |
| 1.4 | PLAQUE MEC. ENC. 100 | **893.056.9** | 1 | 0.580 |
| 1.5 | POUSSOIR | **328.045.0** | 6 | 0.030 |
| 1.6 | PORTE.-POINC. MEC. ENCOCH. 100 | **300.058.0** | 1 | 1.920 |
| | | | | |
| 2 | BAGUE D'ARRET BENZING | **858.047.1** | 1 | 0.020 |
| 3 | GUIDE 100 OEM FORME | **102.333.9xx** | 1 | 1.440 |
| 3.c | GUIDE 100 OEM FORME croquis | **102.311.911** | 1 | 1.440 |
| | | | | |
| 4 | POINCON 100 OEM FORME | **105.333.9xx** | 1 | 1.130 |
| 4.c | POINCON 100 OEM FORME croquis | **105.333.911** | 1 | 1.130 |
| | | | | |
| 5 | ROND. PR. P. ENCOCH. 100 | **893.093.9** | 1 | 0.010 |
| 6 | MATRICE 100 MC FORME | **100.333.9xx** | 1 | 2.800 |
| 6.c | MATRICE 100 MC FORME croquis | **100.333.911** | 1 | 2.800 |
| | | | | |
| 7 | RONDELLE AUTOCOLLANTE M 100 | **893.064.9** | 1 | 0.030 |